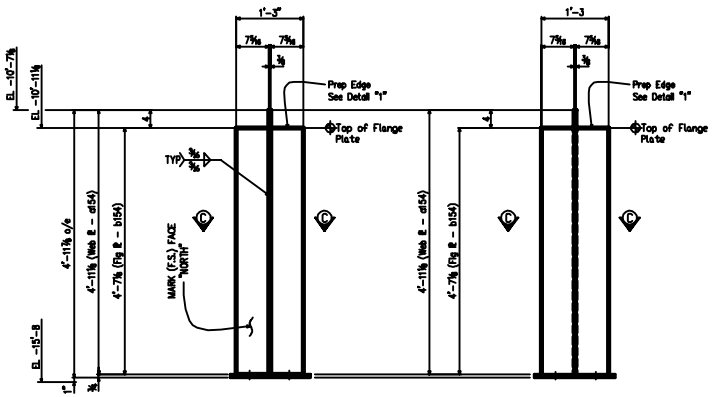


SECTION A-A

SECTION B-B

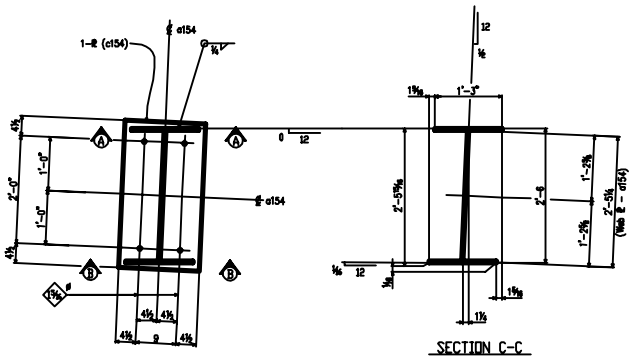


SECTION C-C

## ONE - Column - 154C1

- NEAR GRID G-10
- NOTE: FLANGES NOT PARALLEL
- HOLE PATTERN PARALLEL WITH WEB ℄

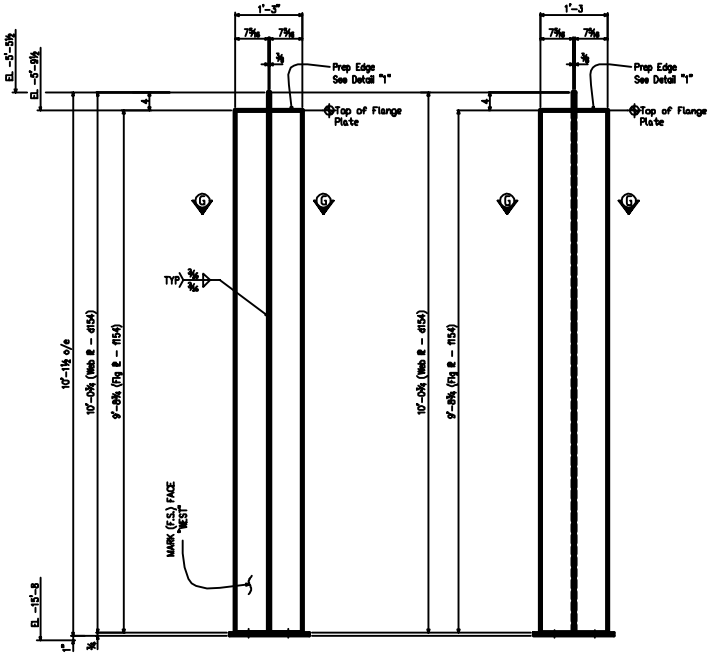


SECTION D-D

SECTION F-F

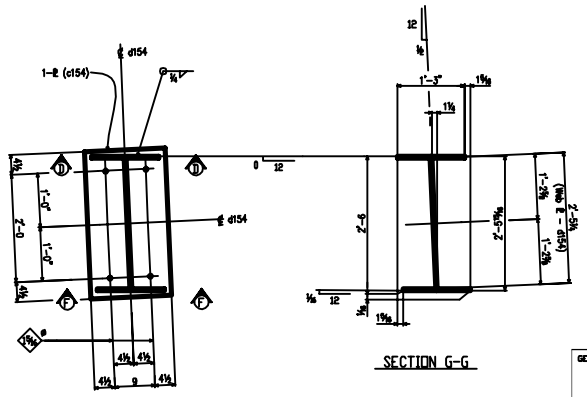


SECTION G-G

## ONE - Column - 154C2

- NEAR GRID F-11
- NOTE: FLANGES NOT PARALLEL
- HOLE PATTERN PARALLEL WITH WEB ℄

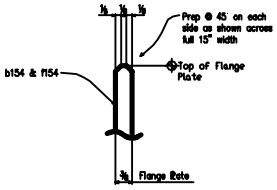


DETAIL "1"

## BILL OF MATERIAL

| 1 | 2 | 3 | 4 | LINE | MARK | No. of PIECES | MATERIAL | LENGTH FT | LENGTH IN | ABN # | WEIGHT | GRADE | REMARKS |
|---|---|---|---|---|---|---|---|---|---|---|---|---|---|
| | | | | 1 | | | | | | | | | |
| | | | | 2 | 154C1 | ONE | COLUMN | | | | | | |
| | | | | 3 | a154 | 1 | ℄ 3/8 x 29 9/16 | 4 | 11 1/8 | | | A36 | |
| | | | | 4 | b154 | 2 | ℄ 3/8 x 15 | 4 | 7 1/8 | | | A36 | |
| | | | | 5 | c154 | 1 | ℄ 3/8 x 18 | 2 | 9 | | | A36 | |
| | | | | 6 | | | | | | | | | |
| | | | | 7 | | | | | | | | | |
| | | | | 8 | | | | | | | | | |
| | | | | 9 | | | | | | | | | |
| | | | | 10 | 154C2 | ONE | COLUMN | | | | | | |
| | | | | 11 | d154 | 1 | ℄ 3/8 x 29 9/16 | 10 | 0 3/8 | | | A36 | |
| | | | | 12 | f154 | 2 | ℄ 3/8 x 15 | 9 | 8 3/8 | | | A36 | |
| | | | | 13 | c154 | 1 | ℄ 3/8 x 18 | 2 | 9 | | | A36 | |
| | | | | 14 | | | | | | | | | |
| | | | | 15 | | | | | | | | | |
| | | | | 16 | | | | | | | | | |
| | | | | 17 | | | | | | | | | |
| | | | | 18 | | | | | | | | | |
| | | | | 19 | | | | | | | | | |
| | | | | 20 | | | | | | | | | |
| | | | | 21 | | | | | | | | | |
| | | | | 22 | | | | | | | | | |
| | | | | 23 | | | | | | | | | |
| | | | | 24 | | | | | | | | | |
| | | | | 25 | | | | | | | | | |
| | | | | 26 | | | | | | | | | |
| | | | | 27 | | | | | | | | | |
| | | | | 28 | | | | | | | | | |
| | | | | 29 | | | | | | | | | |
| FIELD BOLTS | | | | | | | | | | | | | |

GENERAL NOTES:

WELD: As Noted — WELD: E70XX (LOW HYDROGEN)

PAINT: 1 s/c PRIMER PER SPECS — SURFACE PREP: SSPC-SP10

MATERIAL: A36 U.N.

| REV. | DESCRIPTION | BY | DATE |
|---|---|---|---|
| 1 | FABRICATION ISSUE | MTF/SDS | 11/25/02 |

| FOR APPROVAL: | TO SHOP: | TO FIELD: |
|---|---|---|
| R & R APPROVAL: | BEST. | AS BUILT: |

AISC Requirements

Provide materials that are free of surface blemishes such as pitting, roller marks, rolled-in scale, slivers and surface roughness. Also cut and ends mass mills.

Cut, fit and assemble units with squared surfaces smooth, square and free from cutting marks, sheer distortion, burns and slabs.

Tolerances for fabrication and erection are one-half of standard tolerance.

Welds shall be smooth and uniform, welds that are required to be ground are noted as such.

SHOP NOTES:
BOLTS: 3/4# A325
REF. DWG: E14 (AISI)


COMMSTEEL
CERTIFIED MINORITY ENTERPRISE
900 E. 59 th. ST.
CLEVELAND, OHIO
216-881-8250
FAX 881-7643


| | | | |
|---|---|---|---|
| JOB NAME: | THE HEALTH MUSEUM | DRAWN BY: MTF | CHECKED BY: TLM |
| LOCATION: | CLEVELAND, OHIO | SCALE: 1"=1'-0 | |
| ARCHITECT: | Buccheri Architects | DATE: 11/02 | |
| CONTRACTOR: | The Albert M. Higley Co. | JOB NUMBER | SHEET |
| DESCRIPTION: | Stair Columns | 2002-028 | 154 |

154